CS LAB s.c.
www.cs-lab.eu

User * Manual * Guide *

simDrive
AC SERVO

simDrive™ Servo Drive and CSM Servo Motor AC 220V
Quickstart - Connection Guide v.750W

www.cs-lab.eu

Content

1. General

In CS-Lab's offer you can find simDrive™ AC servo drives 400W and 750W and compatible CSM AC motors.

This guide will help you to connect encoder and power cables (included) to run this set.

Sets available in CS-Lab's offer:

The Servo Drive & Motor 400W Set[1]**:** *SimDrive™AC Servo 400W::325V + CSM Servo Motor AC 220V::400W*
is a fully compatible set that includes:
- simDrive™AC Servo 400W 325V **M4-H040K Model
- CSM60-013M30 400W Servo Motor (with a 2500 imp/rev encoder and Hall sensors)
- power cable (5m)
- encoder cable (5m)

The Servo Drive & Motor 750W Set[2]**:** *simDrive™AC Servo 750W::325V + CSM Servo Motor AC 220V::750W*
is a fully compatible set that includes:
- simDrive™AC Servo 7500W 325V **M4-H075K Model
- CSM80-024M30 750W Servo Motor (with a 2500 imp/rev encoder and Hall sensors)
- power cable (5m)
- encoder cable (5m)

Power Module 325VDC/ 2000VA - Power Supply for a simDrive Servo Drive
The Power Module 325VDC/ 2000VA applies to:

- simDrive™AC Servo 400W 325V **M4-H040K Model *(the power module is sufficient for up to 6 of these drives)*
- simDrive™AC Servo 750W 325V **M4-H075K Model *(the power module is sufficient for up to 4 of these drives)*

The following Quickstart guide applies to simDrive servo drives 750W and CSM motors 750W.

[1] Servo drives, motors and cables also available separately.
[2] Servo drives, motors and cables also available separately.

Attention:
Recently in our offer we have new type of 750W CSM motor.
Encoder and power cables used for these motors have different color of wires.

2. Encoder cable

At the end of the encoder cable you will find a DB15 plug. simDrive doesn't have a corresponding socket as all its control signals were placed on a DB37 (CN1). In this situation some modifications are required. You can choose between four ways of connection depending on what is more convenient for you:

Connection methods

I. The first method is about to remove male DB 15 plug and solder encoder cable's wires directly to a male DB37 plug - as shown in the picture below.

A. The scheme shows connection for the old type on encoder cable with round, metal plugs.

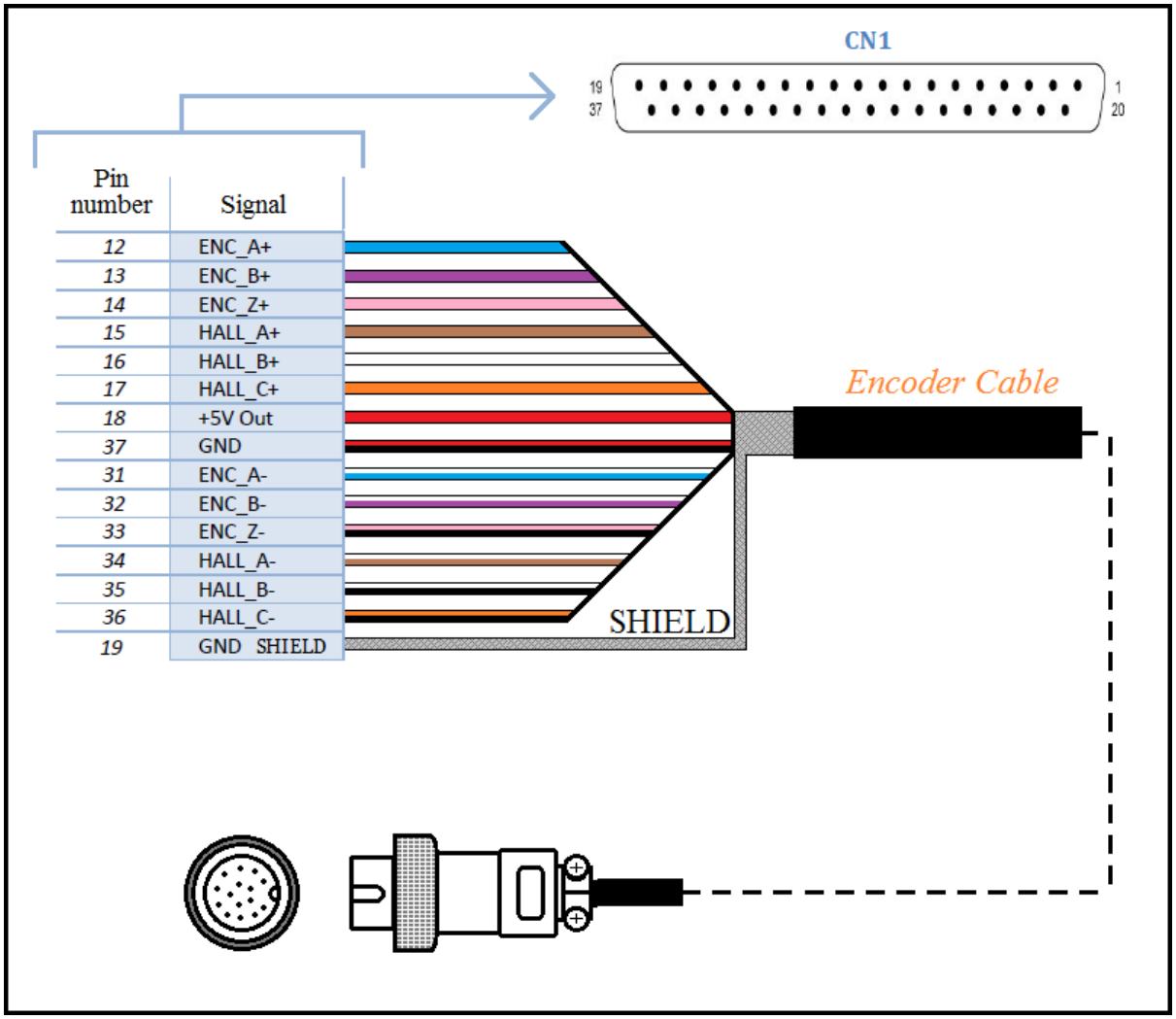

B. The scheme shows connection way for the new type of encoder cable with square, plastic plugs.

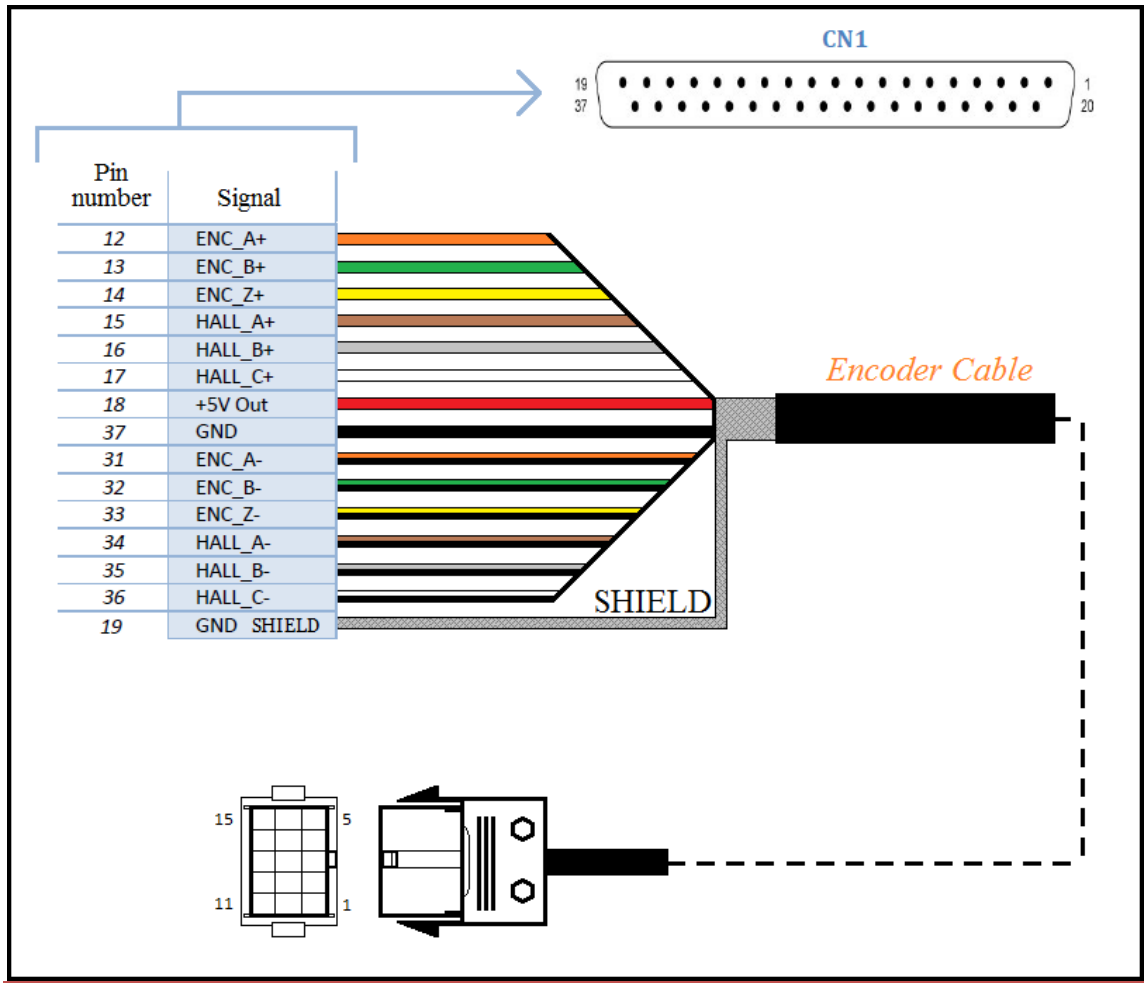

II. **The second method** - leave the male DB15 plug on the encoder cable and make an adapter with a female DB15, which will be soldered to a male DB37. Look at the picture below.

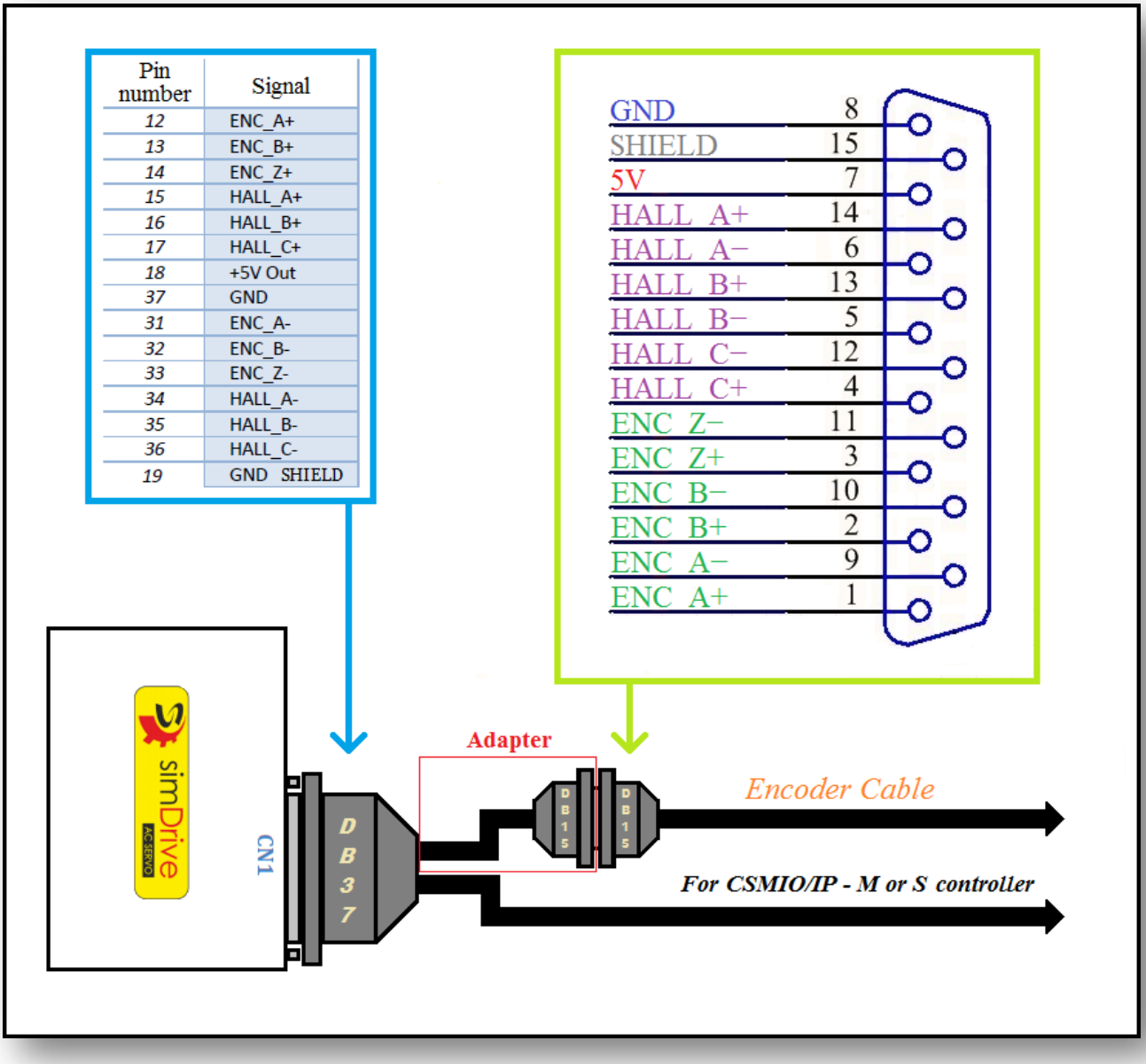

III. **The third method** is almost the same as the second one with the only difference - a location of the DB15 plugs connection placed this time on a control box wall.

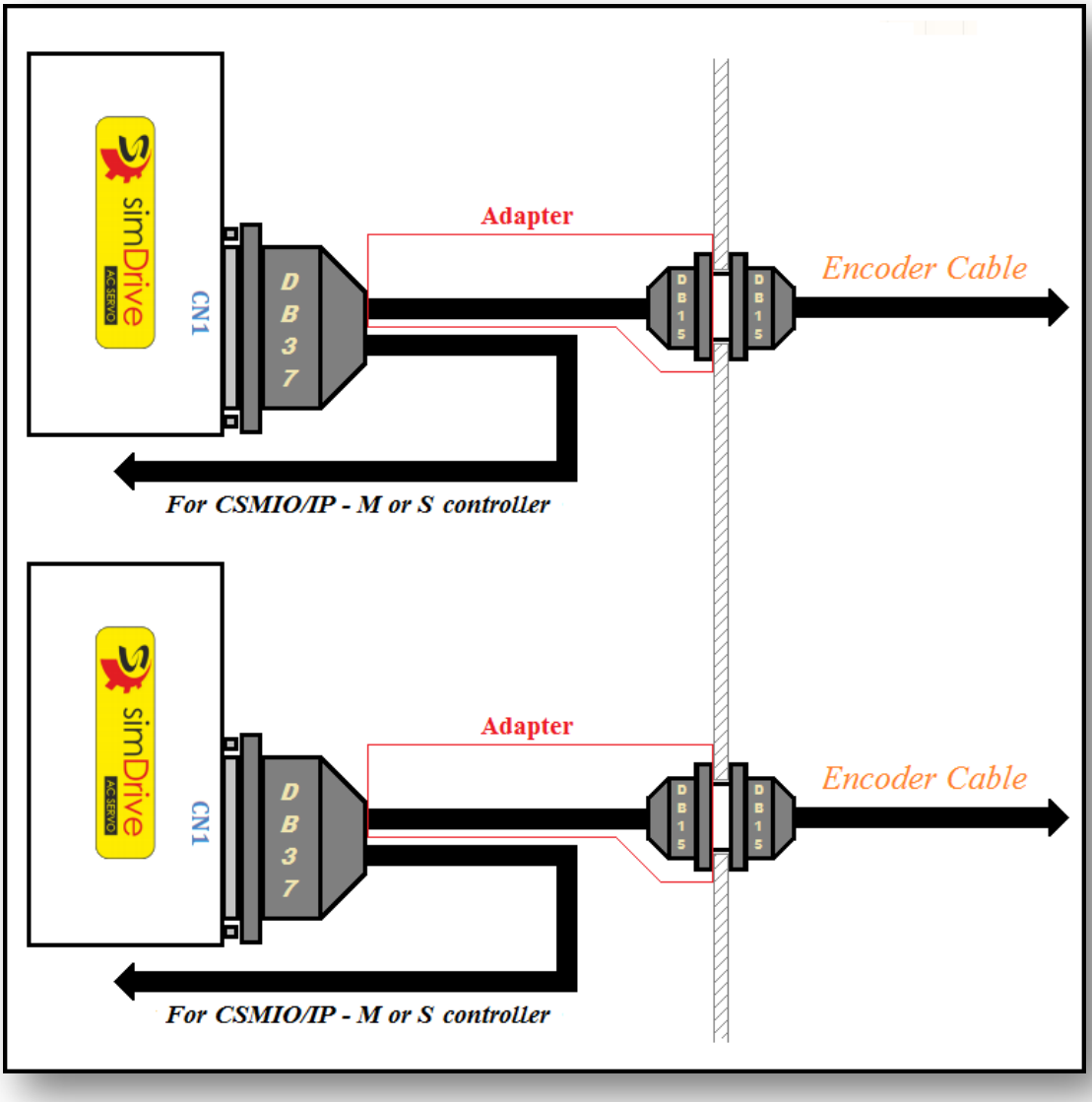

Pay attention to pin 15 of the DB15 plug of encoder cable - it was described as „GND SHIELD" - it is special GND to which you should connect encoder cable shield.

If a machine is equipped with a panel with connectors or you have to build extension of encoder cable, you should lead shield of the cable through the pin and not through the metal housing.

If the shield is soldered to the metal housing of DB15 and it touches metal housing of a machine there will be noises on encoder signal.

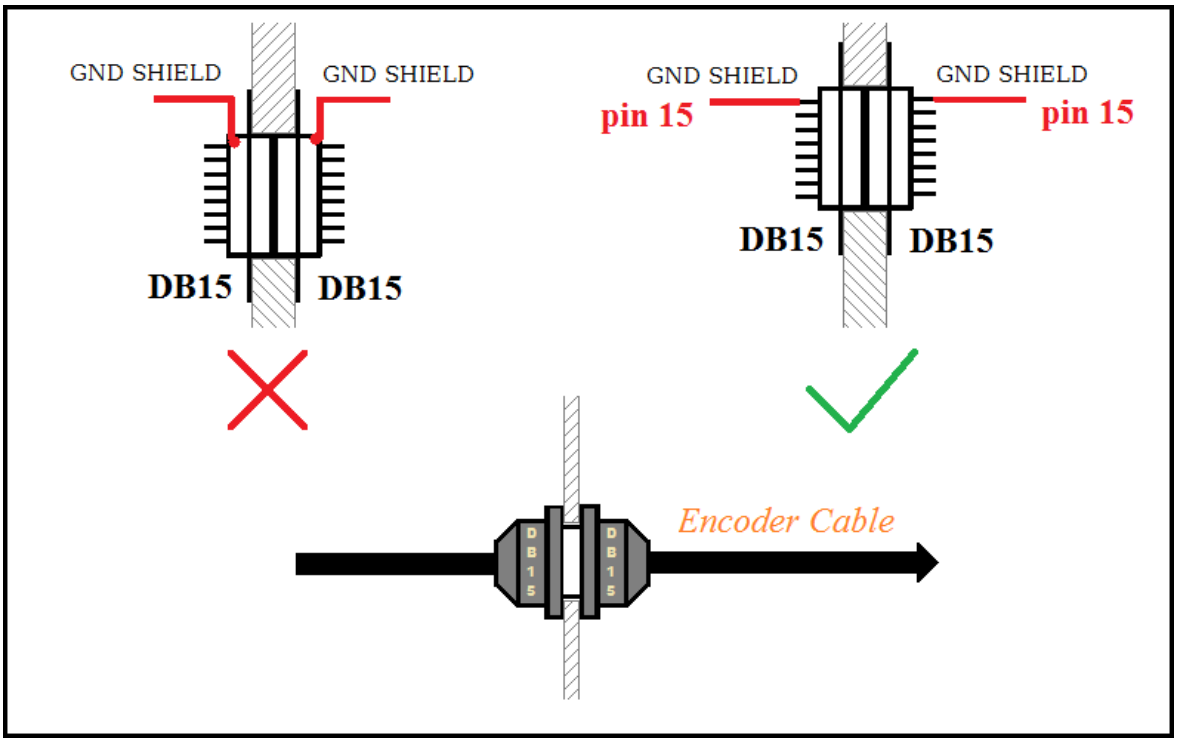

IV. **The fourth method** - with adapter use for connection without modifications and soldering.

The adapter was equipped with:

- Female DB15 socket - where you should connect DB15 plug of encoder cable (included).
- Female DB9 socket - for CAN connection, signals assignment is the same for both simDrive 750W and simDrive 400W simDrive 400W, CSMIO/IP controllers and expansion modules (CAN bus pins are placed on the green terminal).
- A green terminal - where to you should connect control signals (Step/Dir, Servo Alarm, Servo Reset, Servo On and CAN bus). To make it easier for a user the numbers of pins on the green terminal are consistent with pins description of DB37 (CN1) plug in simDrive servo drive manual.

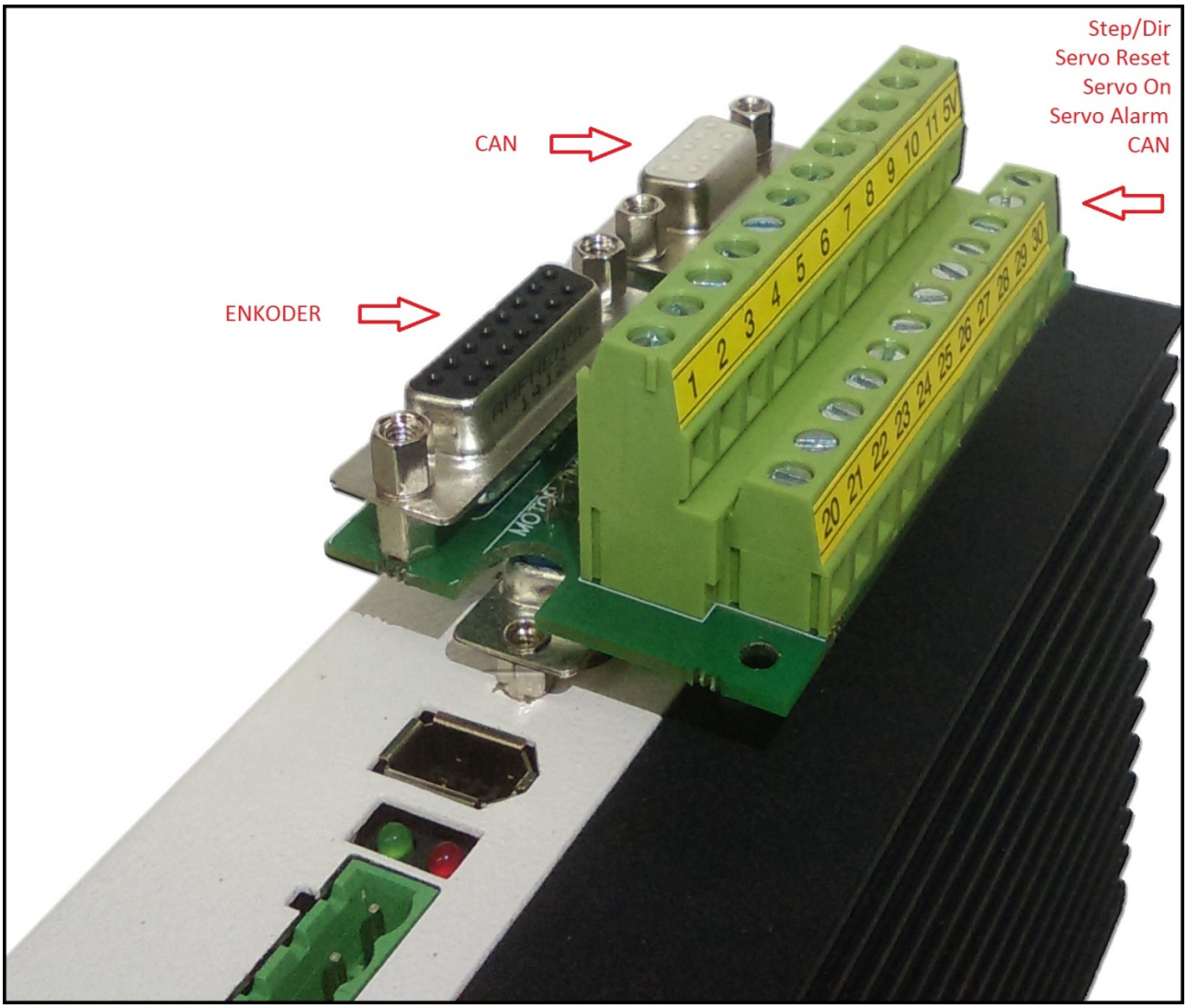

3. Power cable

Motor power phases wires

The power cable (incl.) doesn't require any modifications as it was equipped with a proper plug compatible with simDrive.

A. The scheme shows connection way for the old type of power cable with round, metal plug.

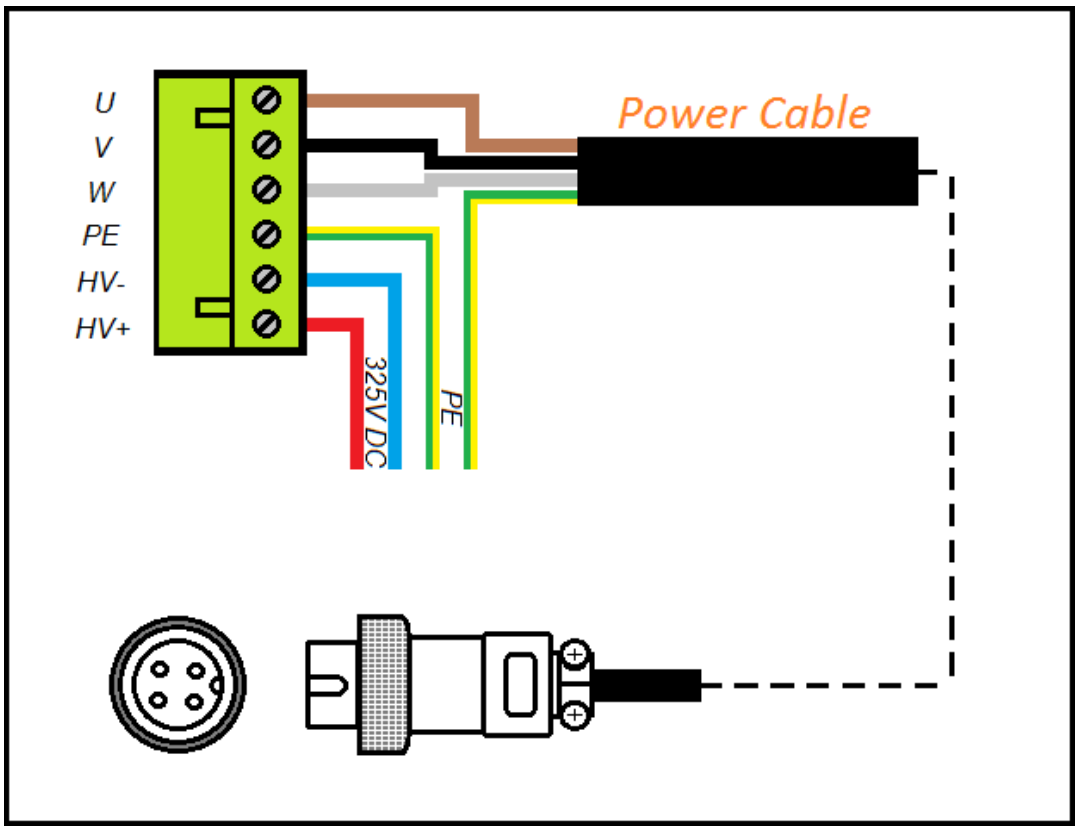

B. The scheme shows connection way for the new type of encoder cable with square, plastic plug.

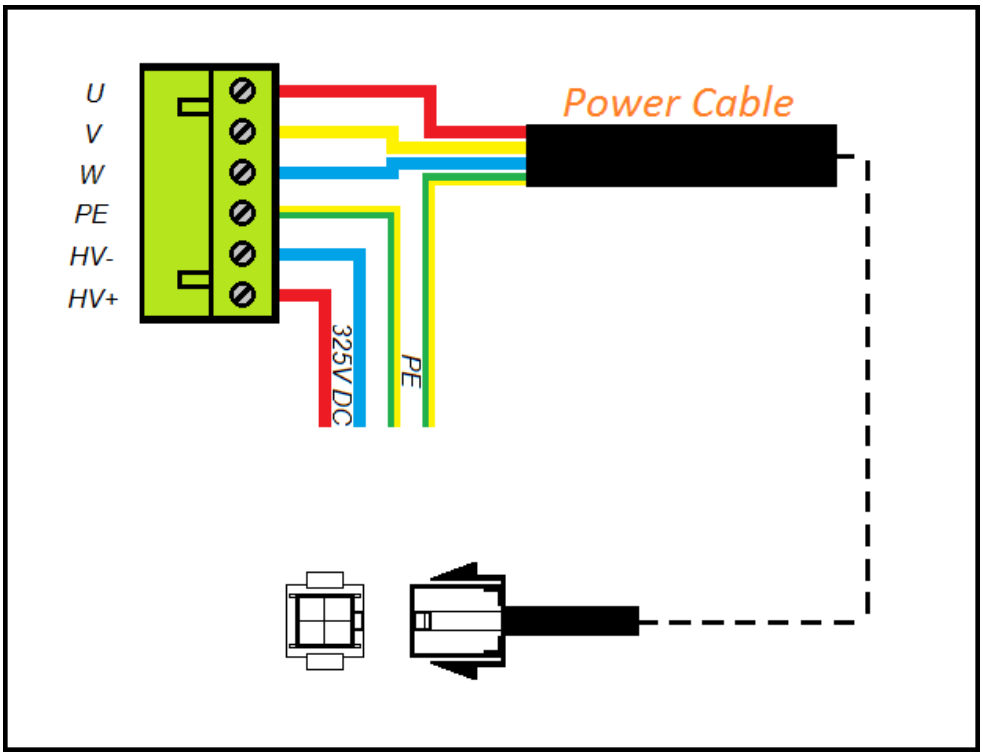

PE protective conductor

It is very important to connect PE wire of a power cable correctly. Look at the picture below to see how to route the PE wires for main control components of a machine. Pay attention to PE protective conductor wire of a simDrive which can be connected to 325 VDC Power supply - Power Module 325VDC/ 2000VA (by CS-Lab) or to main PE connector. Any other way of PE connection may lead to noises and incorrect simDrive and other components operation.